Dimensions

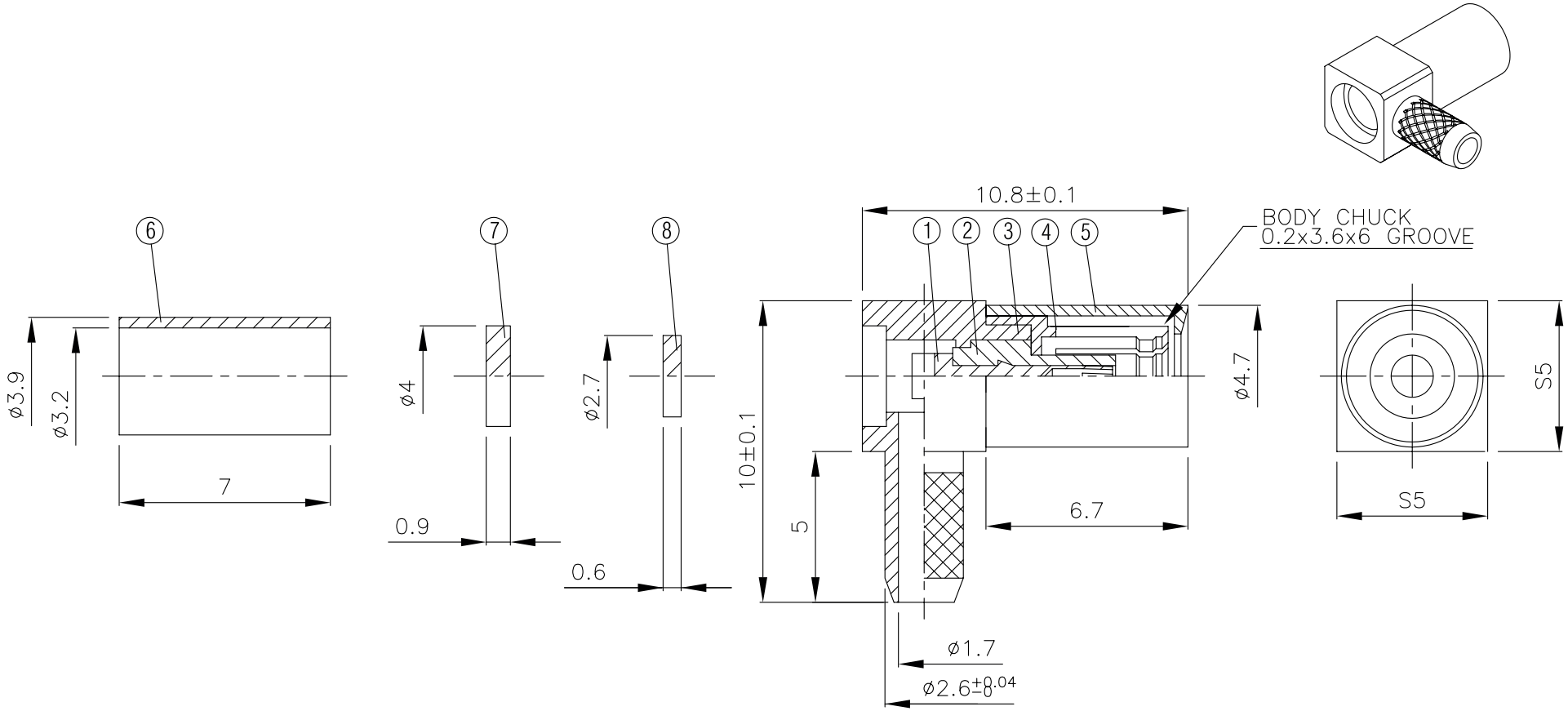
6
7
8
1
2
3
4
5
10.8±0.1
BODY CHUCK
0.2x3.6x6 GROOVE
ø3.9
ø3.2
7
ø4
0.9
ø2.7
0.6
10±0.1
5
6.7
ø4.7
S5
S5
ø1.7
ø2.6±0.04